HYDRANOR

MODULAR WINCH UNITS

11MB-150/300 for flow 120-320 lpm

Winch control manifolds for variable pumps

- Pipe mounted model
- Compact design
- Pressure compensator system for load independent control of hydraulic motor
- Actuations
  - Manual
  - Hydraulic remote
  - Proportional electric operation
  - Combination of those above
- Options for
  - Brake release valve
  - Up to 2 NG6 flanges for operation of external functions

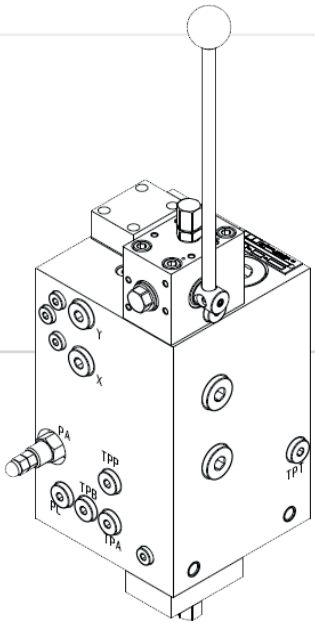

DESCRIPTION		DATA
Flow ranges	150	120-220 l/min
	300	220-320 l/min
Weight	150/300	35 kg
Max pressure	P, A, B	350 bar
	T	20 bar
	D	10 bar
Pilot pressure		5-20 bar
Test pressure		420 bar
Fluid temperature range		-20°C to +70°C
Ambient temperature range		-20°C to +50°C

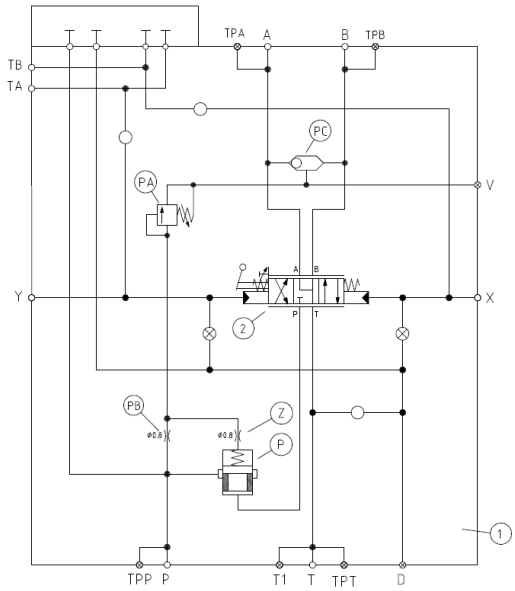

SERVI GROUP
post@servi.no